0 1 2 3 4 5 6 7 8 9

DECOWELL®

Company	Nanjing Decowell Automation
Project Description	EX Series Wiring Diagrams
Project No.	EX-V1.5
Project Name	EX Series Wiring Diagrams
Address	Pukou District, Nanjing
Project Manager	Technical Service Dept.
Created Date	2020/10/15
Edited Date	2024/12/6
Pages	23

Core Values: "Quality builds the brand, service shapes the future"

Vision: "To become the world's leading provider of industrial automation products and solutions"

Mission: To be an expert in industrial control signal processing centered on I/O modules

Contents

Column X: an auto-generated page was manually modified

Page	Page Description	Supplementary Page Field	Date	Editor	X
/1	Cover		2024/8/7	Lidao	X
/2	Contents		2024/8/7	Lidao	
/3	EX Adapter Power Wiring Diagram		2024/8/7	Lidao	
/4	EX Adapter Power Wiring Diagram		2024/8/7	Lidao	
/5	8DI Module Wiring Diagram		2024/8/7	Lidao	
/6	16DI Module Wiring Diagram		2024/8/7	Lidao	
/7	32DI Module Wiring Diagram		2024/8/7	Lidao	
/8	Single-Phase Pulse Input Module Wiring Diagram		2024/8/7	Lidao	
/9	Digital Input Expansion Module Sensor Wiring		2024/8/7	Lidao	
/10	8DO Module Wiring Diagram		2024/8/7	Lidao	
/11	16DO Module Wiring Diagram		2024/8/7	Lidao	
/12	32DO Module Wiring Diagram		2024/8/7	Lidao	
/13	Relay Module Wiring Diagram		2024/8/14	Lidao	
/14	32-Pt Digital I/O Module		2024/8/7	Lidao	
/15	32-Pt Digital I/O Module Terminal Block		2024/8/7	Lidao	
/16	32-Pt Digital Input Module Wiring Diagram		2024/8/7	Lidao	
/17	32-Pt Digital Output Module Wiring Diagram		2024/8/7	Lidao	
/18	Analog Input Module Wiring Diagram		2024/8/7	Lidao	
/19	Analog Output Module Wiring Diagram		2024/8/7	Lidao	
/20	RTD / Thermocouple Wiring Diagram		2024/8/7	Lidao	
/21	Pulse Input Module		2024/8/7	Lidao	
/22	Communication Module		2024/8/7	Lidao	
/23	Power Module		2024/8/7	Lidao	

Next 3

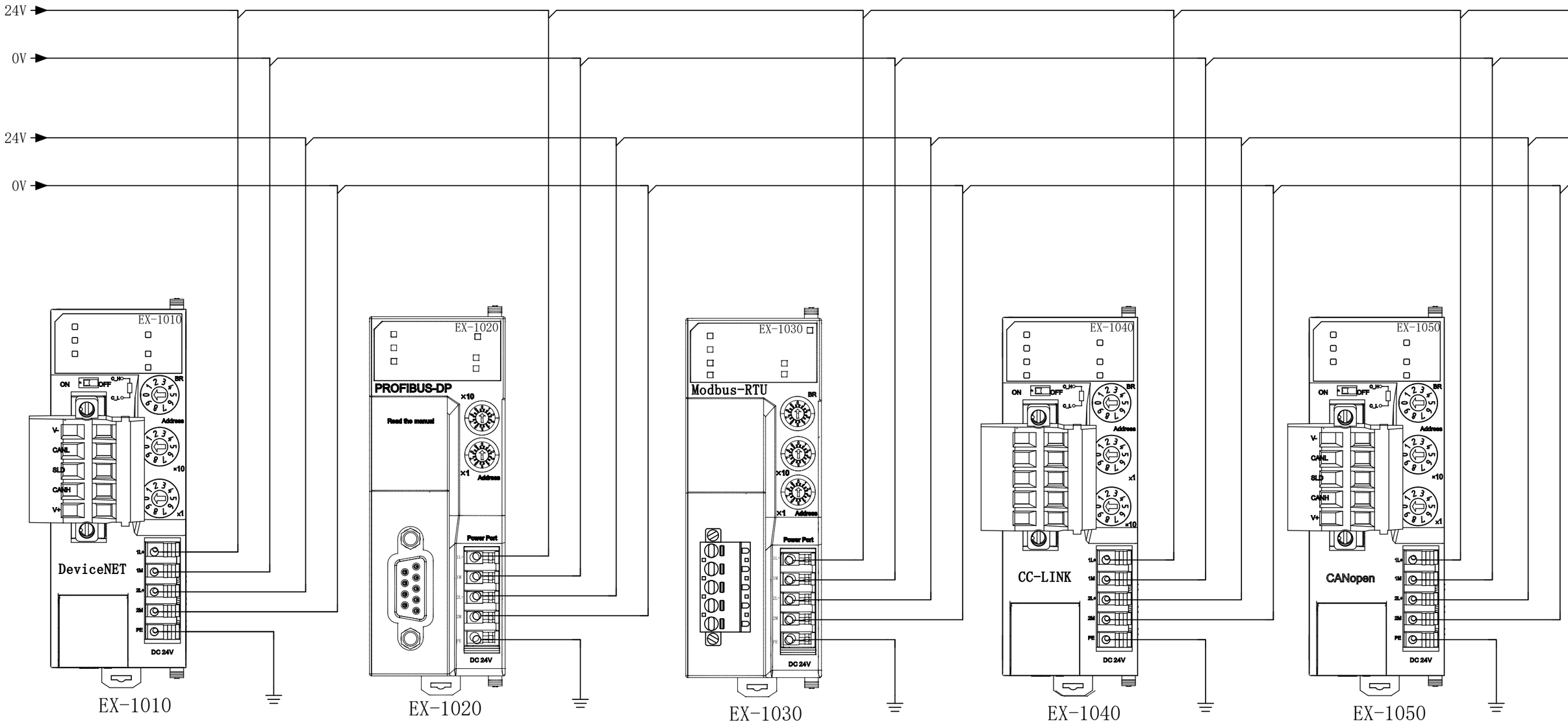

EX-1010 EX-1020 EX-1030 EX-1040 EX-1050

EX series adapter power consists of system power and I/O load power.

Two sets of DC 24V are required for normal operation.

Next
4

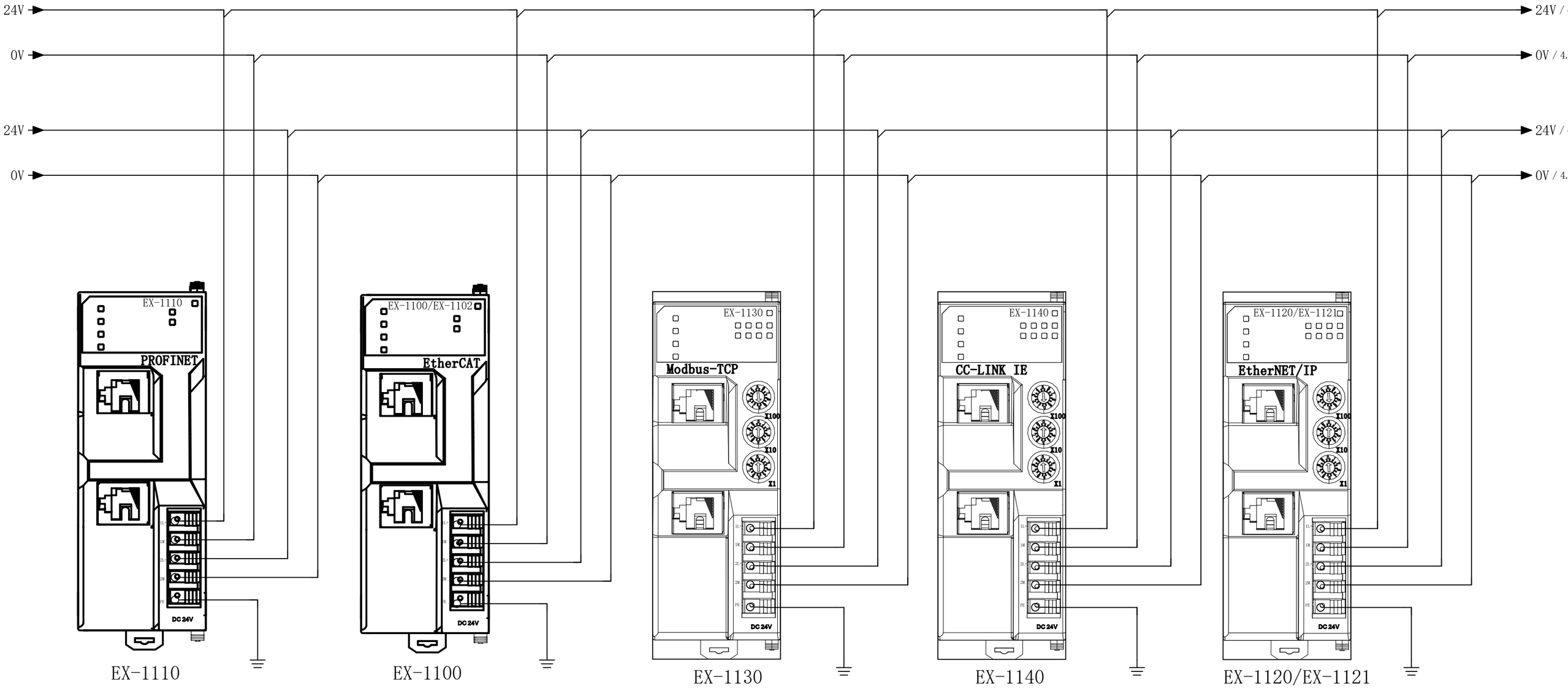

EX series adapter power consists of system power and I/O load power.

Two sets of DC 24V are required for normal operation.

Next
5

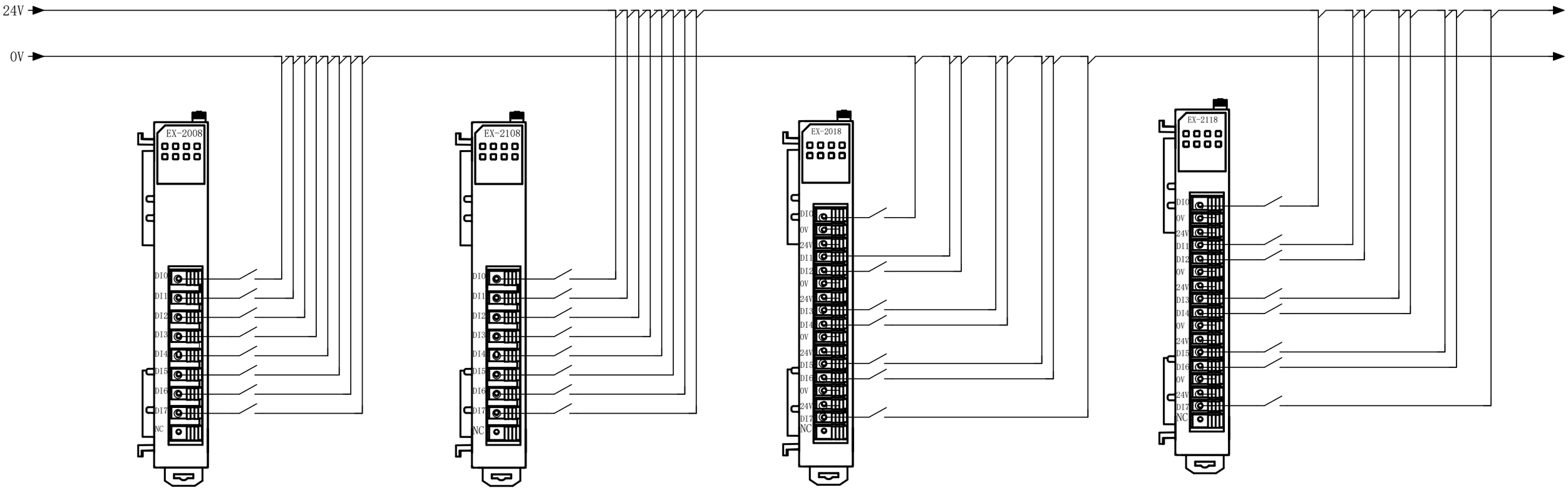

8-Ch Input Module (NPN)
EX-2008

8-Ch Input Module (PNP)
EX-2108

8-Ch Input Module (NPN)
EX-2018

8-Ch Input Module (PNP)
EX-2118

For NPN-type input modules, the input channel must connect to low level to form a loop for signal input.

For PNP-type input modules, the input channel must connect to high level to form a loop for signal input.

NC is a reserved port; no wiring required.

Next
6

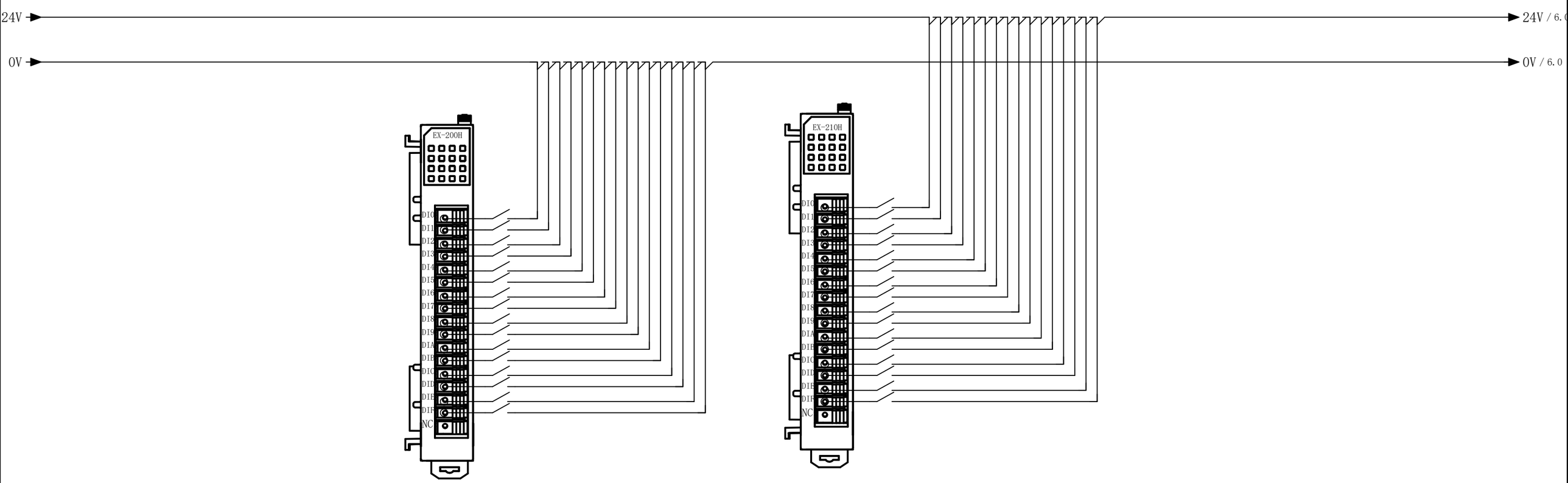

16-Ch Input Module (NPN)
EX-200H

16-Ch Input Module (PNP)
EX-210H

For NPN-type input modules, the input channel must connect to low level to form a loop for signal input.

For PNP-type input modules, the input channel must connect to high level to form a loop for signal input.

NC is a reserved port; no wiring required.

Next
7

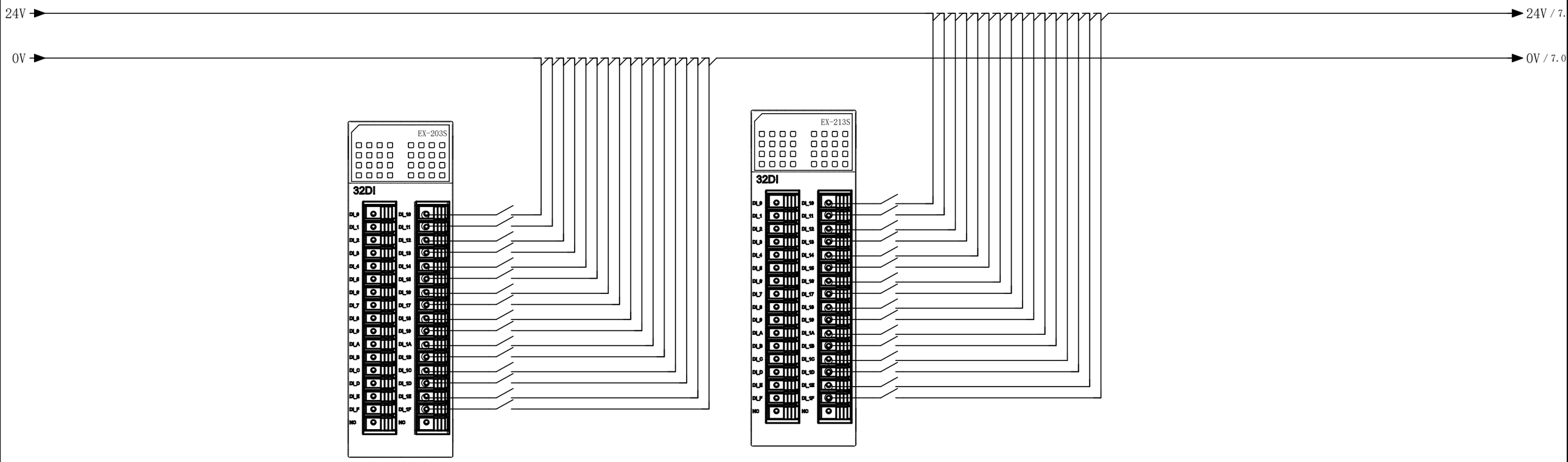

32-Ch Input Module (NPN)
EX-203S

32-Ch Input Module (PNP)
EX-213S

For NPN-type input modules, the input channel must connect to low level to form a loop for signal input.

For PNP-type input modules, the input channel must connect to high level to form a loop for signal input.

NC is a reserved port; no wiring required.

Next
8

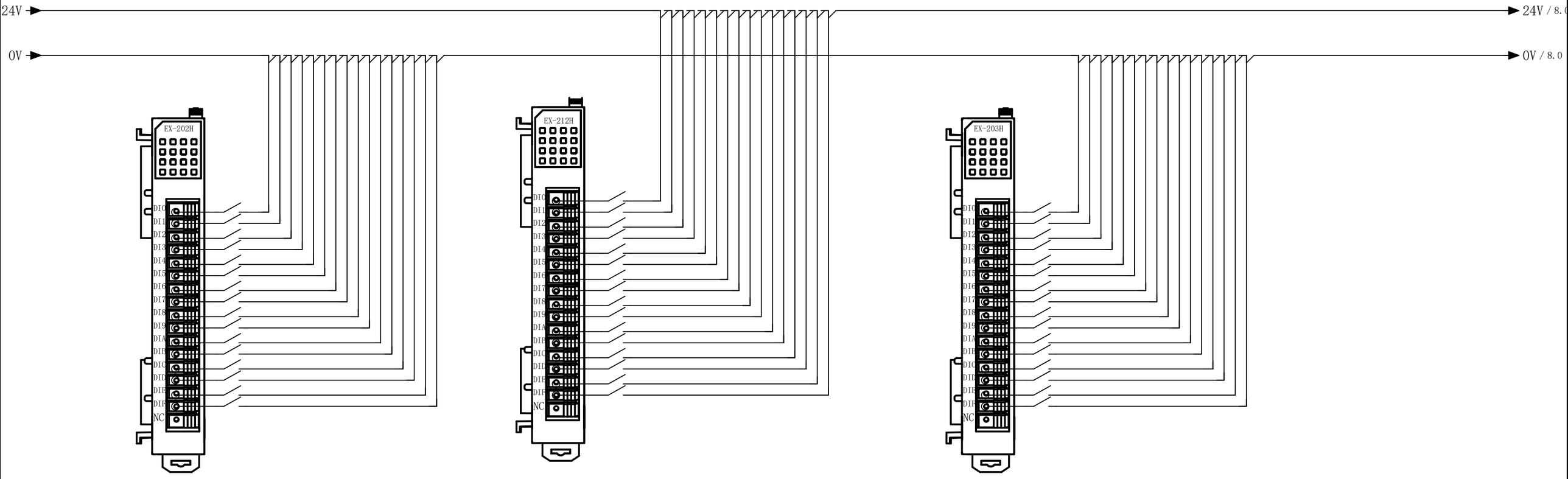

16-Ch Input Module (NPN)
EX-202H

16-Ch Input Module (PNP)
EX-212H

16-Ch Input Module (NPN)
EX-202H

For NPN-type input modules, the input channel must connect to low level to form a loop for signal input.

For PNP-type input modules, the input channel must connect to high level to form a loop for signal input.

The last two channels of the 202H can be parameterized to read NPN single-phase pulse signals.

The last two channels of the 212H can be parameterized to read PNP single-phase pulse signals.

Each channel of the 203H can be parameterized to read NPN single-phase pulse signals.

NC port is reserved; no wiring required.

Next
9

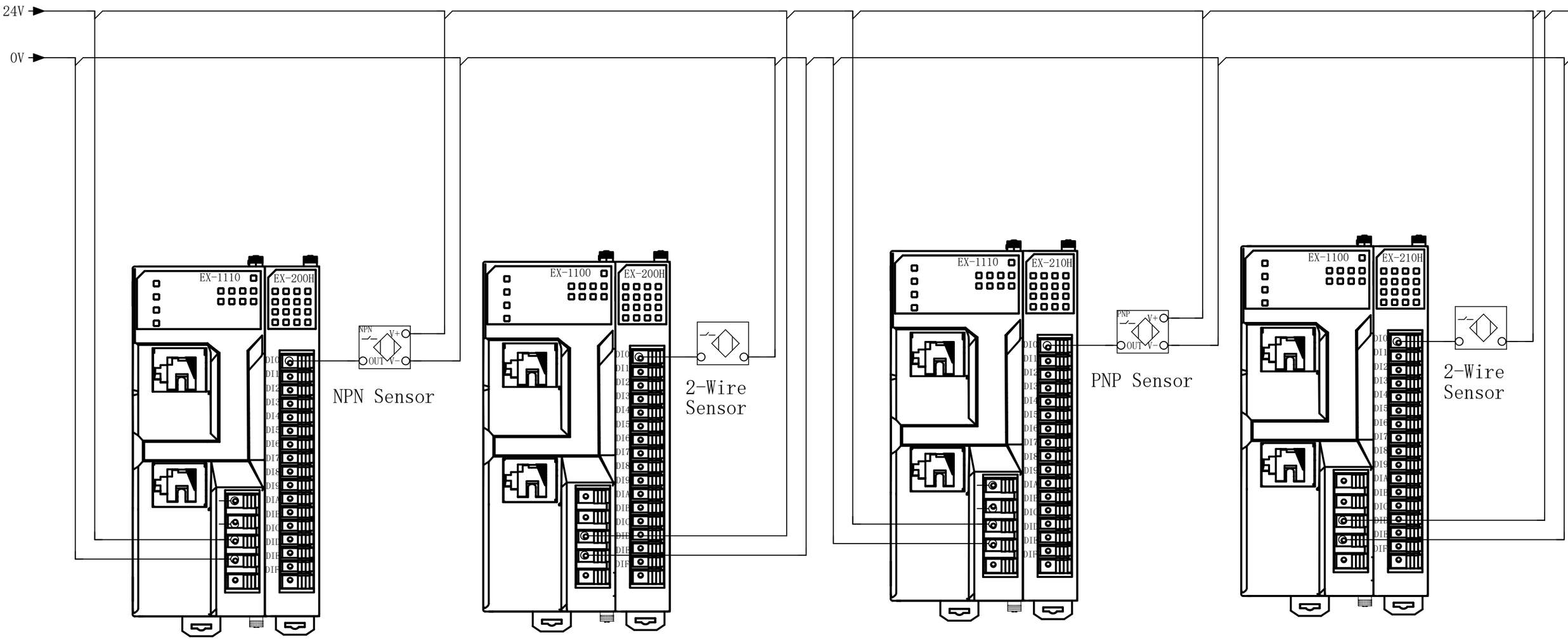

Input Module (NPN)

Input Module (NPN)

Input Module (PNP)

Input Module (PNP)

Next
10

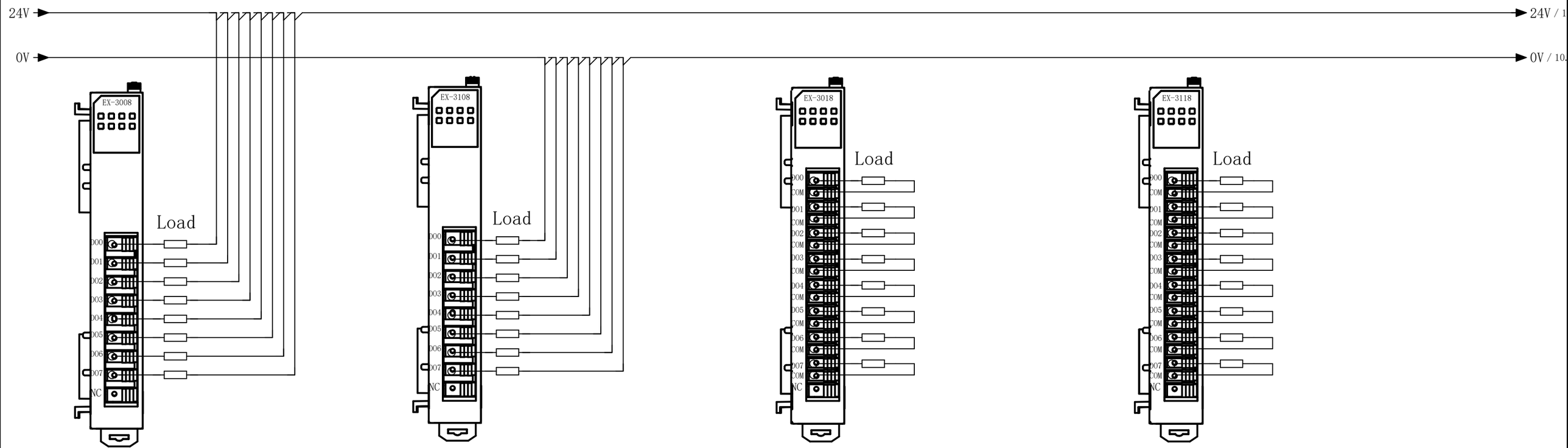

8-Ch Output Module (NPN)
EX-3008

8-Ch Output Module (PNP)
EX-3108

8-Ch Output Module (NPN)
EX-3018

8-Ch Output Module (PNP)
EX-3118

NC is a reserved port; no wiring required.

Next
11

Previous
9

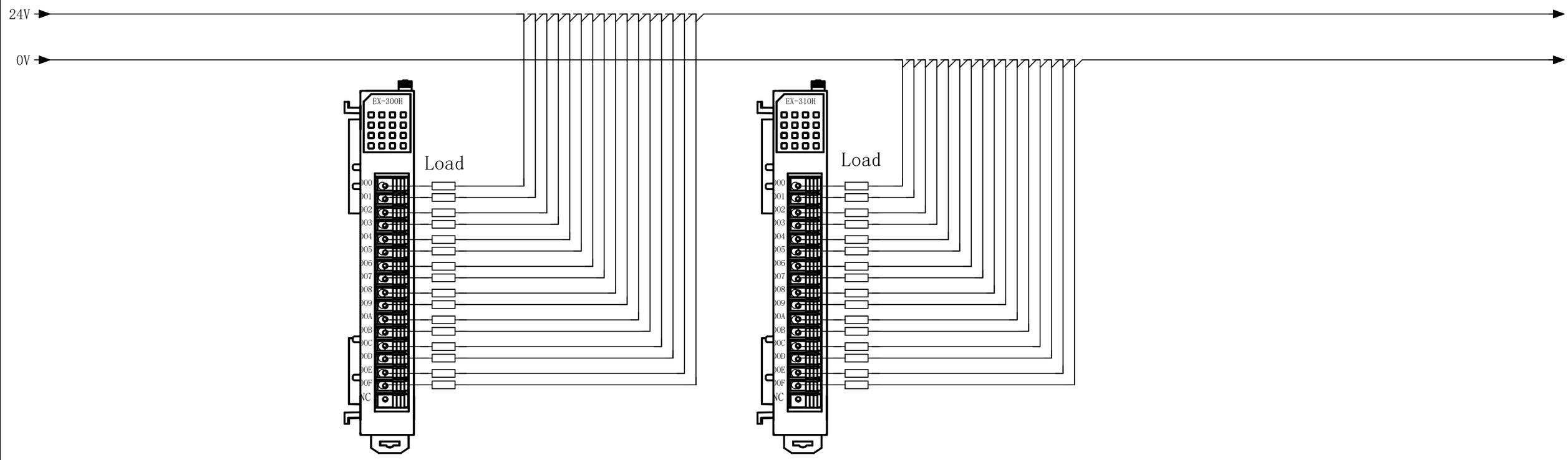

16-Ch Output Module (NPN)
EX-300H

16-Ch Output Module (PNP)
EX-310H

NC is a reserved port; no wiring required.

Next
12

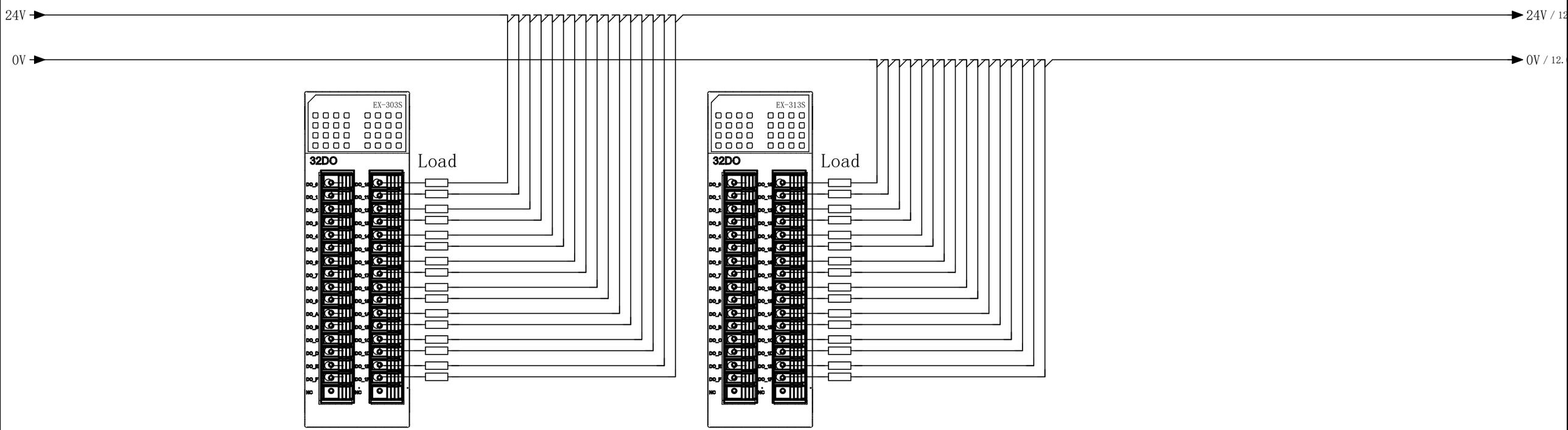

32-Ch Output Module (NPN)
EX-303S

32-Ch Output Module (PNP)
EX-313S

NC is a reserved port; no wiring required.

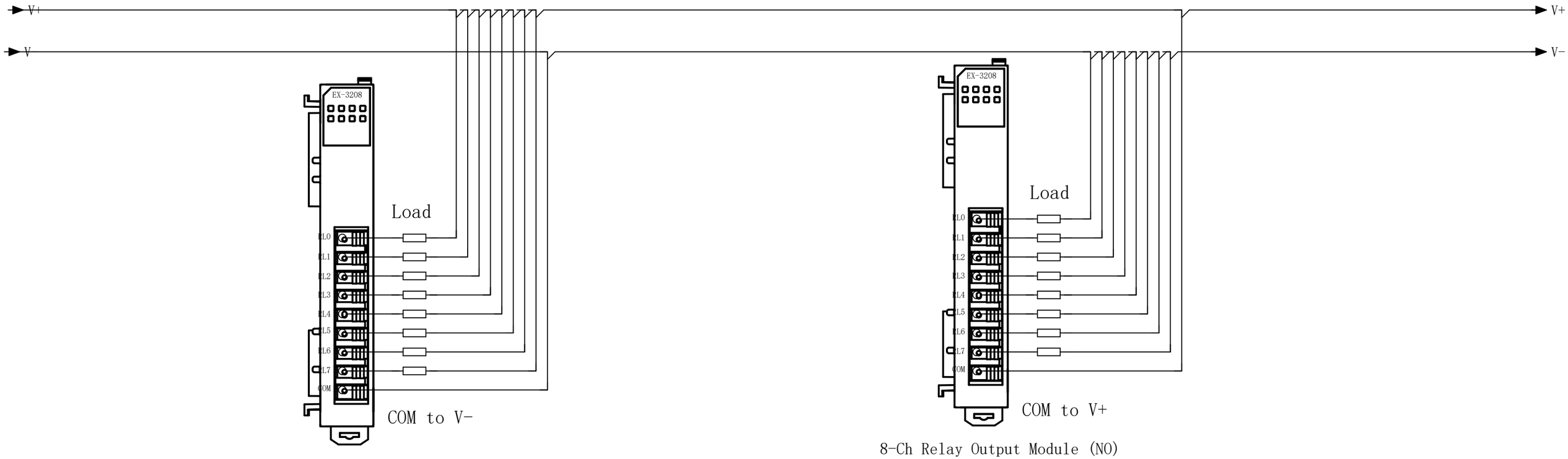

8-Ch Relay Output Module (NO)

Normally-open contact between output channel and COM

EX-3208

8-Ch Relay Output Module (NO)

Normally-open contact between output channel and COM

EX-3208

Previous
12

Next
14

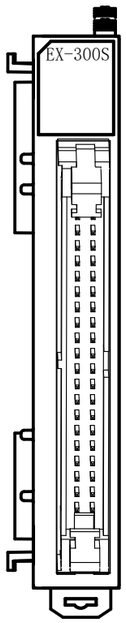

32-Pt NPN Output Module
EX-300S

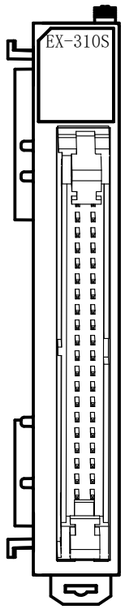

32-Pt PNP Output Module
EX-310S

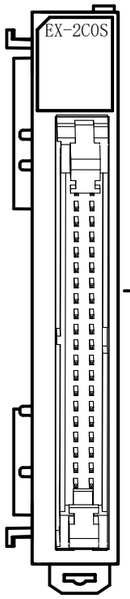

32-Pt NPN/PNP Bidirectional Input Module
EX-2C0S





Terminal Block

This module must be connected to the terminal block via a connecting cable.

Next
15

Previous
13

Terminal Block Pin Definition

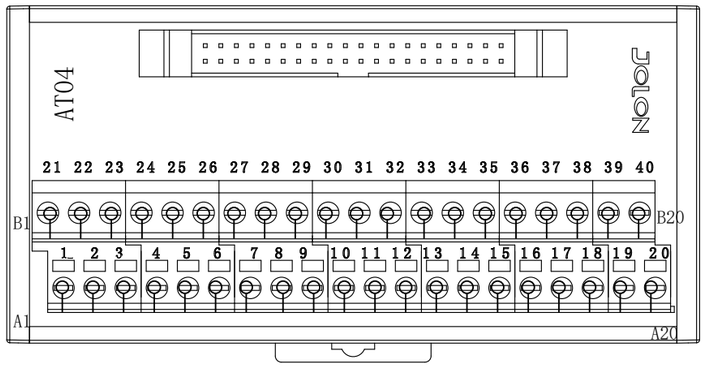

-IO1
EX-300S / EX-310S

Terminal Block AT04

DO16	DO17	DO18	DO19	DO20	DO21	DO22	DO23	COM1	+V1	DO24	DO25	DO26	DO27	DO28	DO29	DO30	COM31	COM1	V1
21	22	23	24	25	26	27	28	29	30	31	32	33	34	35	36	37	38	39	40

DO0	DO1	DO2	DO3	DO4	DO5	DO6	DO7	COM0	+V0	DO8	DO9	DO10	DO11	DO12	DO13	DO14	DO15	COM0	V0
1	2	3	4	5	6	7	8	9	10	11	12	13	14	15	16	17	18	19	20

-IO2
EX-2C0S

Terminal Block AT04

DI16	DI17	DI18	DI19	DI20	DI21	DI22	DI23	COM1	DI24	DI25	DI26	DI27	DI28	DI29	DI30	DI31	COM1	NC	NC
21	22	23	24	25	26	27	28	29	30	31	32	33	34	35	36	37	38	39	40

DI0	DI1	DI2	DI3	DI4	DI5	DI6	DI7	COM0	DI8	DI9	DI10	DI11	DI12	DI13	DI14	DI15	COM0	NC	NC
1	2	3	4	5	6	7	8	9	10	11	12	13	14	15	16	17	18	19	20

Next
16

EX-2COS supports bidirectional input; NPN wiring.

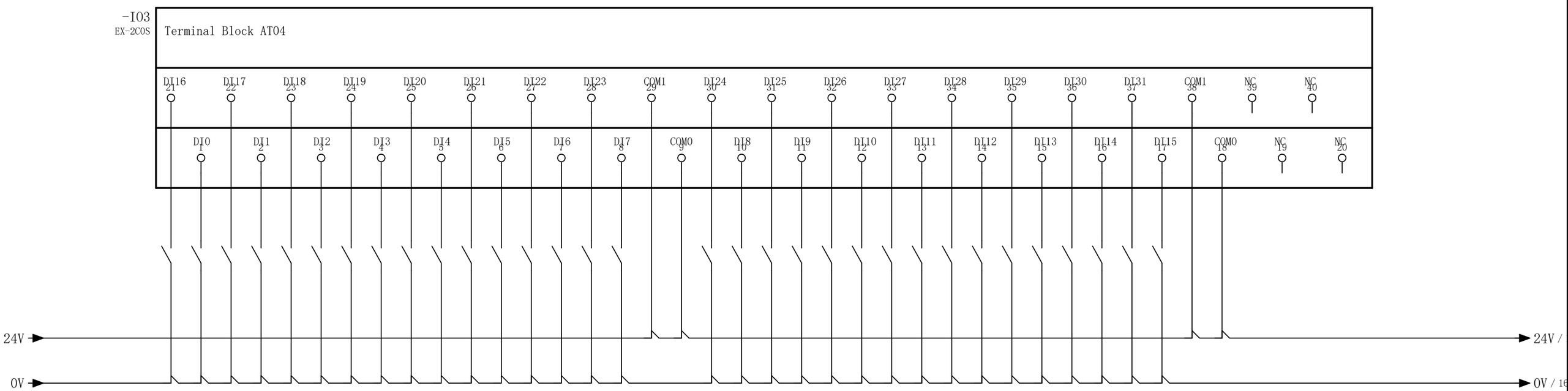

EX-2COS supports bidirectional input; PNP wiring.

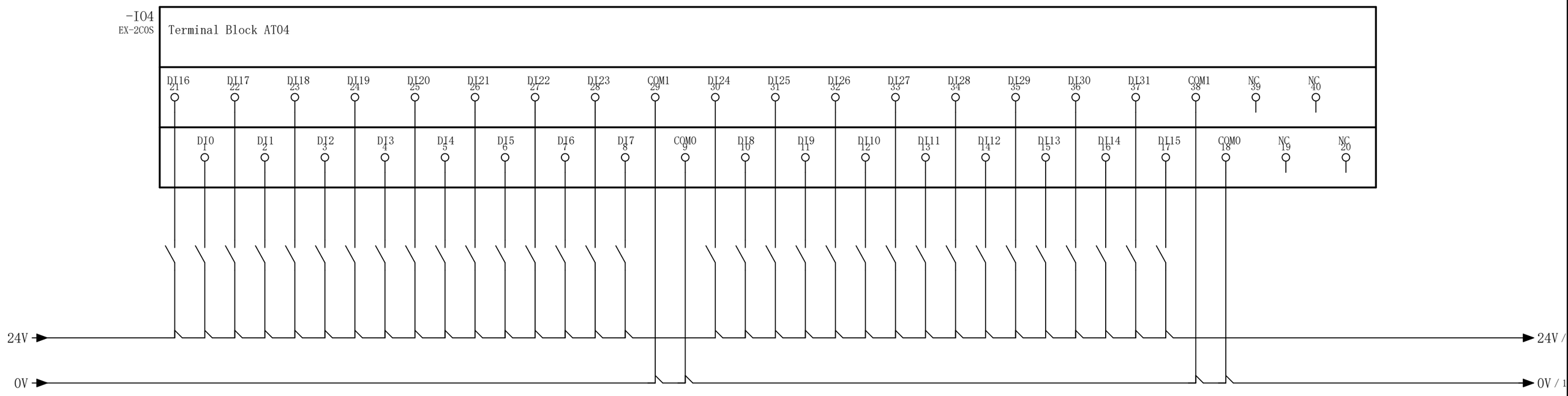

The four COM terminals are internally shorted together and must be connected to the same potential.

Next
17

EX-300S NPN Output Module

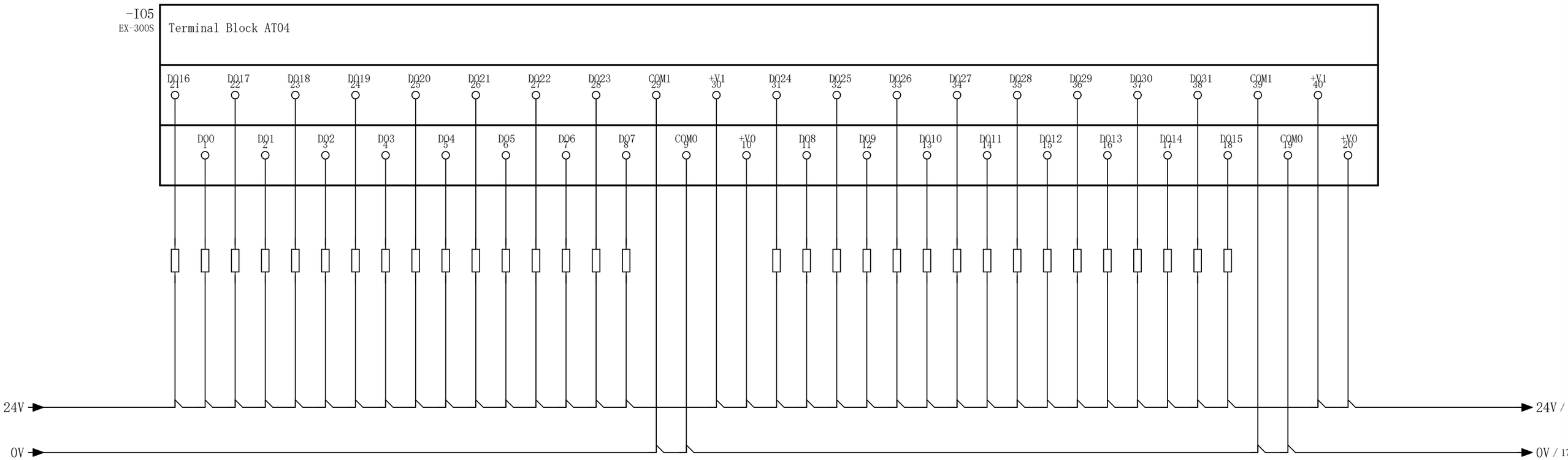

EX-310S PNP Output Module

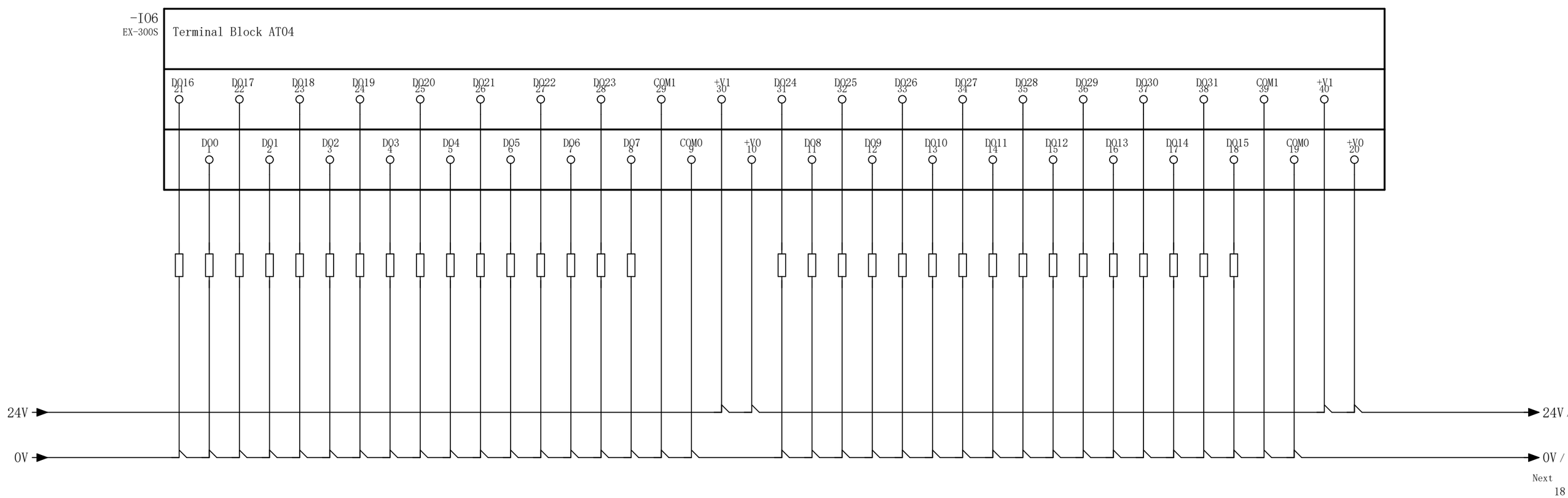

Next
18

Previous
16

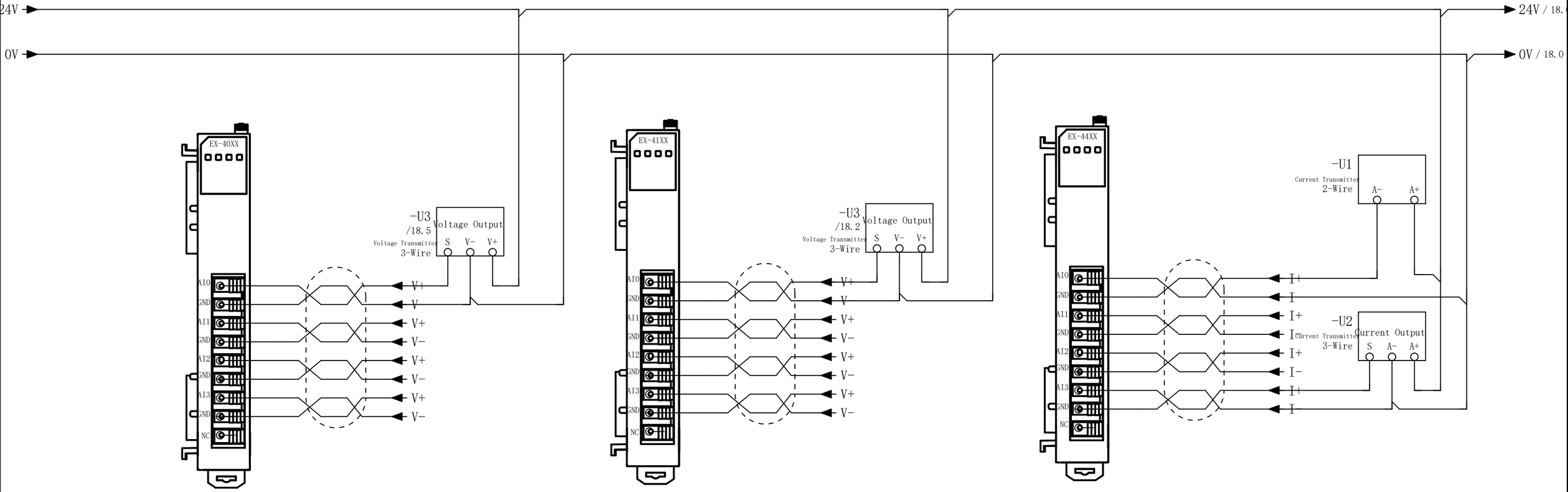

Analog Voltage Input Module
EX-40XX

Analog Voltage Input Module
EX-41XX

Analog Current Input Module
EX-44XX

Previous
17

Next
19

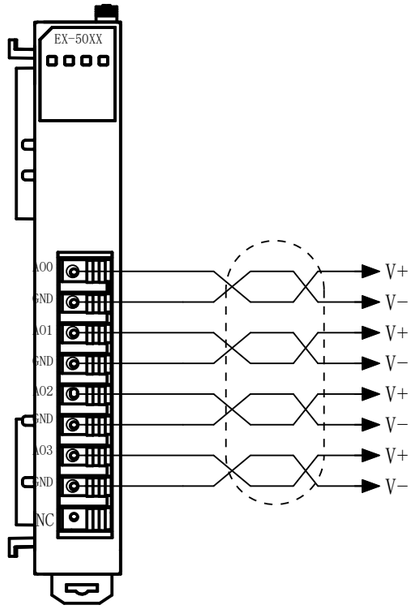

Analog Voltage Output Module
EX-50XX

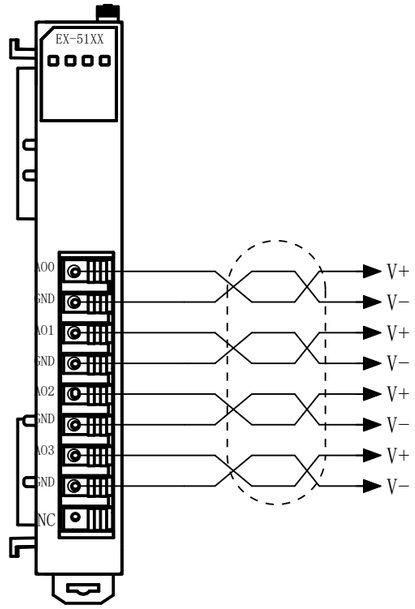

Analog Voltage Output Module
EX-51XX

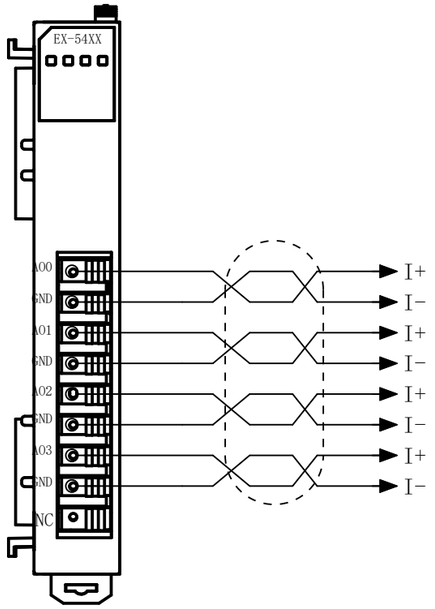

Analog Current Output Module
EX-54XX

Next
20

Previous
18

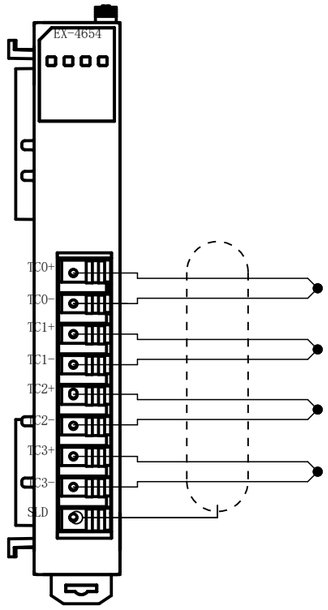

4-Ch Thermocouple Input Module

EX-4654

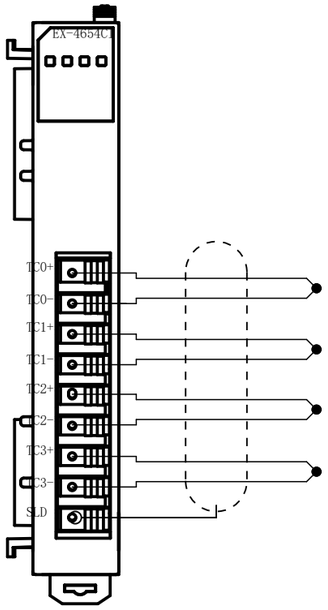

4-Ch Thermocouple Input Module (Channel-Isolated)

EX-4654CI

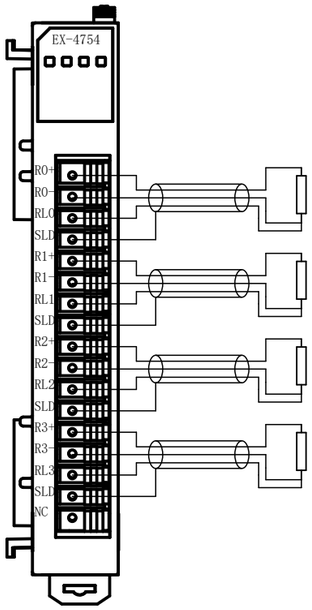

4-Ch RTD Input Module

EX-4754

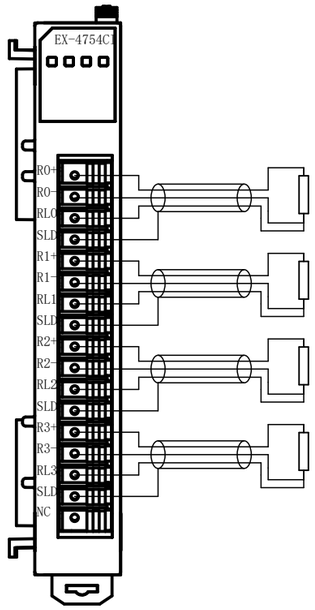

4-Ch RTD Input Module (Channel-Isolated)

EX-4754CI

Next
21

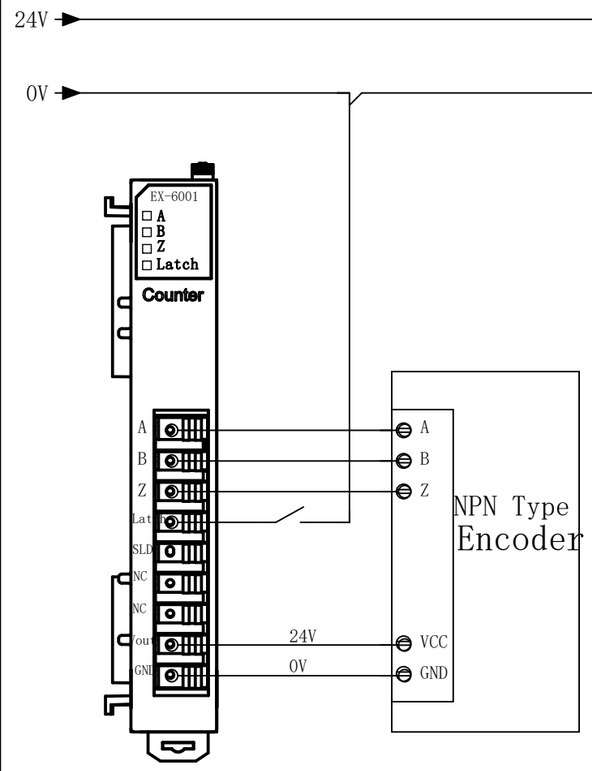

Single-Channel NPN High-Speed Counter

EX-6001

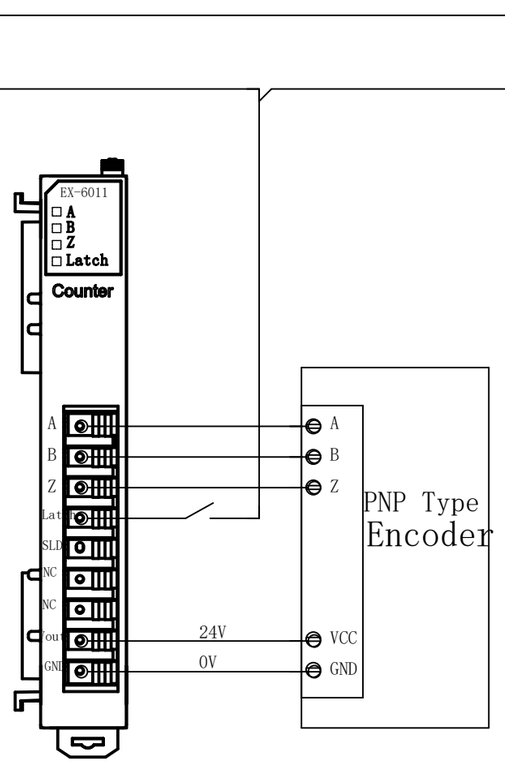

Single-Channel PNP High-Speed Counter

EX-6011

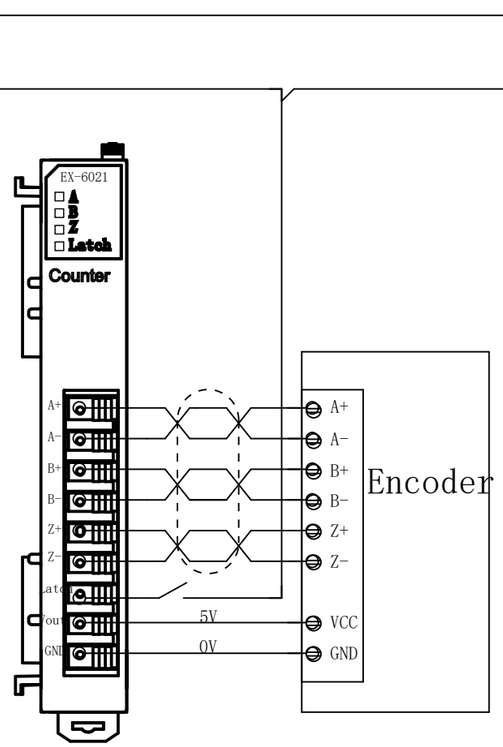

Single-Channel Differential High-Speed Counter

EX-6021

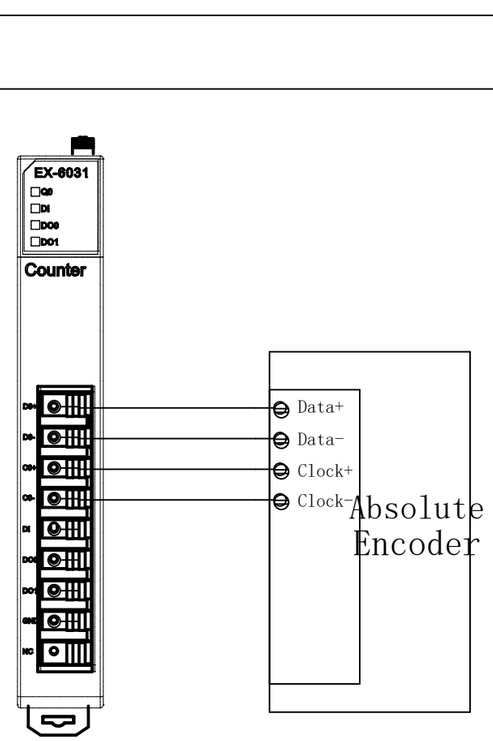

SSI Absolute Encoder Counter Module

EX-6031

Next
22

Previous
20

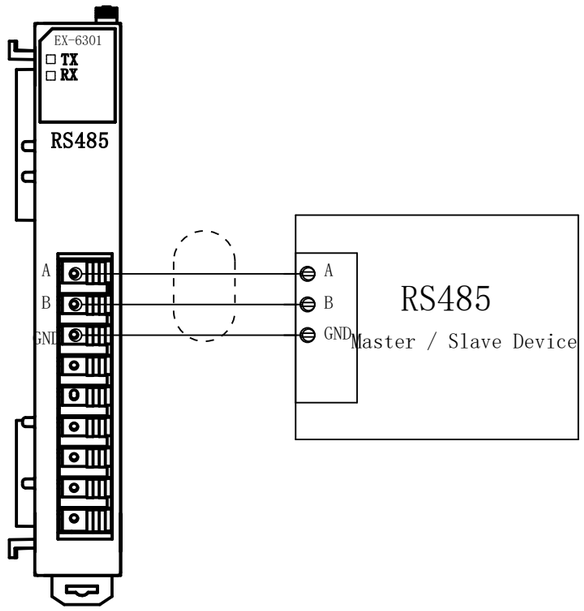

RS485 Free-Port Communication Module

EX-6301

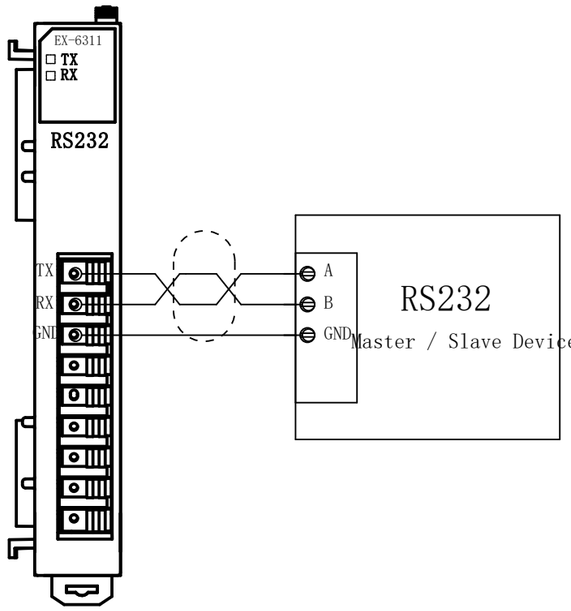

RS232 Free-Port Communication Module

EX-6311

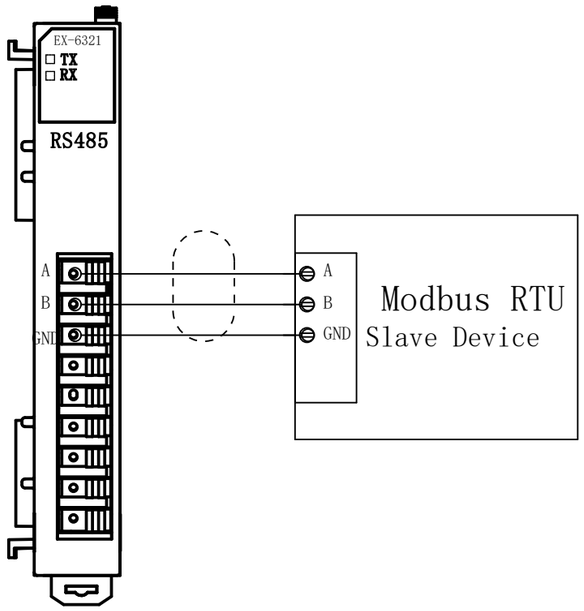

RS485 Free-Port Communication Module

EX-6321

Next
23

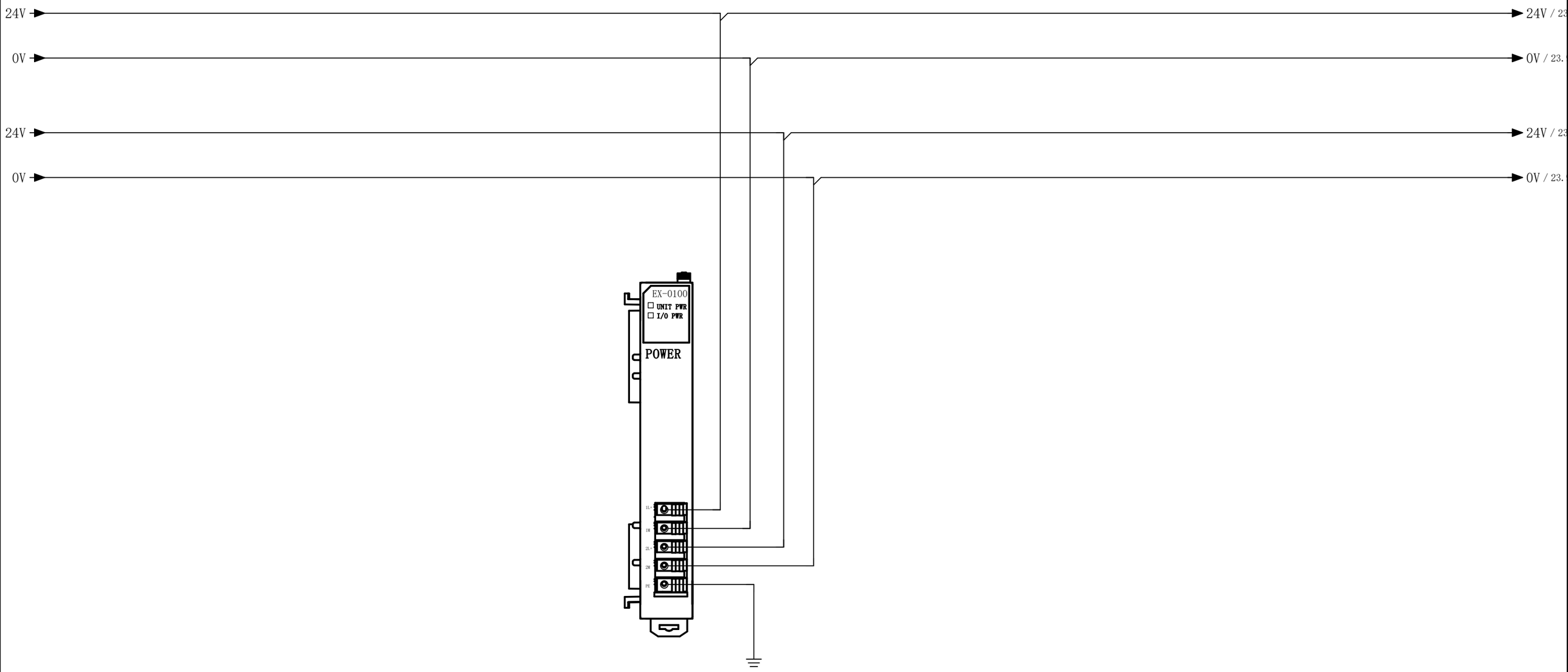

EX-0100

System & I/O Load Power Module

Next